877-338-3006

Limit Switch and Air Solenoid Valve Wiring Diagram
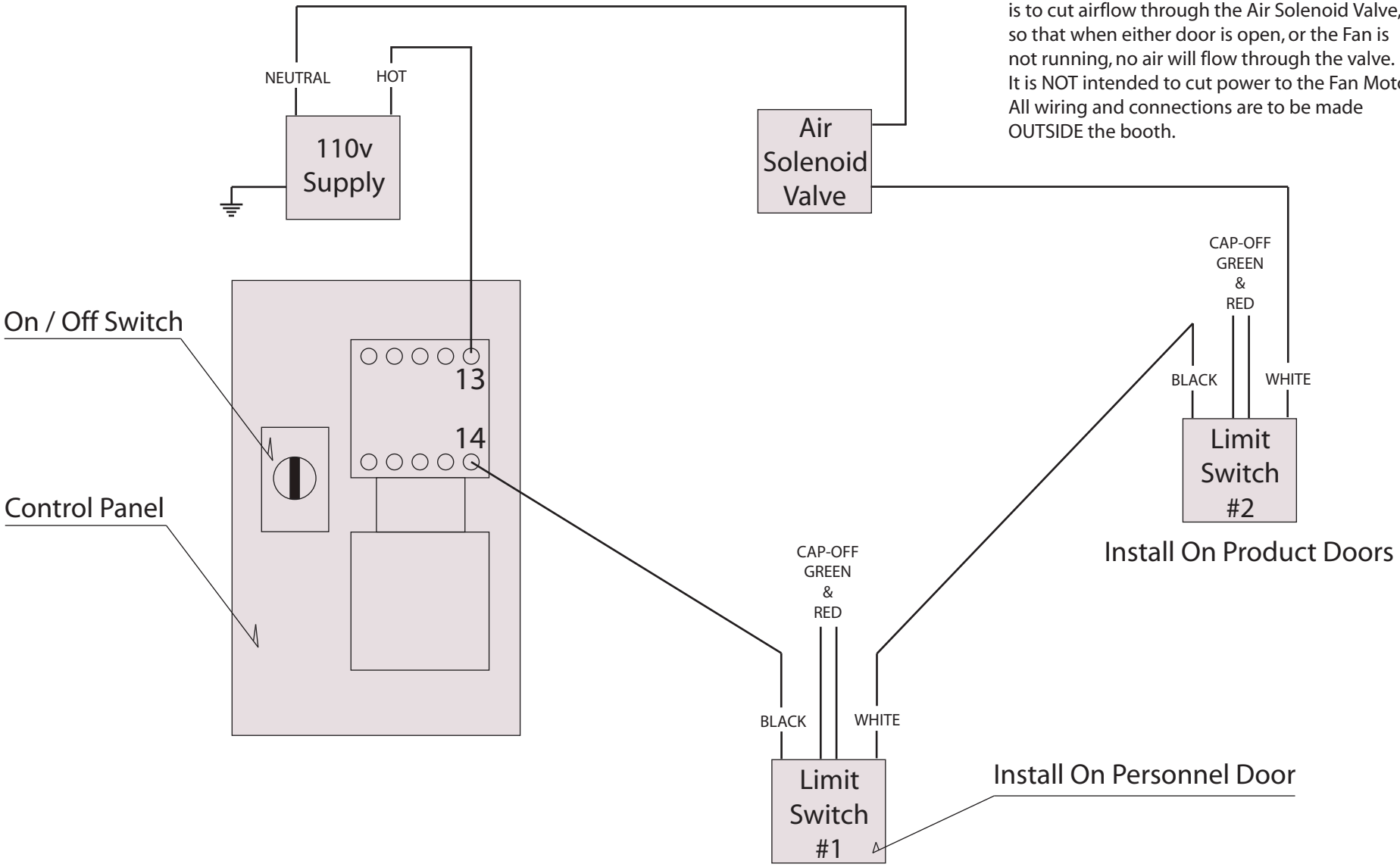
NOTE:
The function of this Door Limit Switch Circuit is to cut airflow through the Air Solenoid Valve, so that when either door is open, or the Fan is not running, no air will flow through the valve. It is NOT intended to cut power to the Fan Motor. All wiring and connections are to be made OUTSIDE the booth.